Blackfin® USB-LAN EZ-Extender® Manual

Revision 2.0, April 2006

Part Number
82-000845-01

Analog Devices, Inc.
One Technology Way
Norwood, Mass. 02062-9106

Copyright Information

Printed in the USA.

Limited Warranty

The USB-LAN EZ-Extender is warranted against defects in materials and workmanship for a period of one year from the date of purchase from Analog Devices or from an authorized dealer.

Disclaimer

Analog Devices, Inc. reserves the right to change this product without prior notice. Information furnished by Analog Devices is believed to be accurate and reliable. However, no responsibility is assumed by Analog Devices for its use; nor for any infringement of patents or other rights of third parties which may result from its use. No license is granted by implication or otherwise under the patent rights of Analog Devices, Inc.

Trademark and Service Mark Notice

Regulatory Compliance

The Blackfin USB-LAN EZ-Extender has been certified to comply with the essential requirements of the European EMC directive 89/336/EEC (inclusive 93/68/EEC) and, therefore, carries the "**CE**" mark.

The Blackfin USB-LAN EZ-Extender had been appended to Analog Devices Development Tools Technical Construction File referenced "DSPTOOLS1" dated December 21, 1997 and was awarded CE Certification by an appointed European Competent Body and is on file.

The EZ-KIT Lite evaluation system contains ESD (electrostatic discharge) sensitive devices. Electrostatic charges readily accumulate on the human body and equipment and can discharge without detection. Permanent damage may occur on devices subjected to high-energy discharges. Proper ESD precautions are recommended to avoid performance degradation or loss of functionality. Store unused EZ-KIT Lite boards in the protective shipping package.

CONTENTS

PREFACE

USB-LAN EZ-EXTENDER INTERFACES

INDEX

PREFACE

Thank you for purchasing the Blackfin® USB-LAN EZ-Extender®, Analog Devices, Inc. extension board to the EZ-KIT Lite® evaluation system for ADSP-BF533, ADSP-BF537, and ADSP-BF561 Blackfin processors.

The Blackfin processors are embedded processors that support a Media Instruction Set Computing (MISC) architecture. This architecture is the natural merging of RISC, media functions, and digital signal processing characteristics towards delivering signal processing performance in a microprocessor-like environment.

The EZ-KIT Lite and USB-LAN EZ-Extender are designed to be used in conjunction with the VisualDSP++® development environment. VisualDSP++ offers a powerful programming tool with new flexibility that significantly decreases the time required to port software code to a processor, reducing time-to-market.

To learn more about Analog Devices development software, go to http://www.analog.com/processors/tools/.

Product Overview

The Blackfin USB-LAN EZ-Extender is a separately sold extension board that plugs onto the expansion interface of the ADSP-BF533, ADSP-BF537, or ADSP-BF561 EZ-KIT Lite evaluation system. The extension board aids the design and prototyping phases of ADSP-BF533, ADSP-BF537, or ADSP-BF561 processor targeted applications.

The board extends the capabilities of the evaluation system by providing a connection between the asynchronous memory bus of the Blackfin processor (asynchronous memory bank 3) and either a USB 2.0 or a 10/100 Mbps Ethernet device.

The following is a list of the Blackfin USB-LAN EZ-Extender interfaces.

- USB 2.0 interface
  - PLX's Technology Netchip 2272 device
  - USB driver and application code
  - USB logo certified
- Ethernet interface
  - SMSC's LAN 91C111 device supported on the ADSP-BF533 EZ-KIT and ADSP-BF561 EZ-KIT Lites
  - IEEE802.3.AF compliant Power-Over-Ethernet (PoE) application on the ADSP-BF537 EZ-KIT Lite
  - SMSC's MII connector to evaluate different PHYs with the ADSP-BF537 EZ-KIT Lite
  - Ethernet stack and application code
- No power supply required
  - Derives power from EZ-KIT Lite
- CE certified

- Dimensions
  - 3.13 in (H) x 3.6 in (W)

Before using any of the interfaces, follow the setup procedure in "USB-LAN EZ-Extender Setup" on page 1-1.

Example programs are available to demonstrate the capabilities of the Blackfin USB-LAN EZ-Extender board.

Purpose of This Manual

The *Blackfin USB-LAN EZ-Extender Manual* describes the operation and configuration of the components on the extension board. A schematic and a bill of materials are provided as a reference for future Blackfin processor board designs.

Intended Audience

This manual is a user's guide and reference to the Blackfin USB-LAN EZ-Extender. Programmers who are familiar with the Analog Devices Blackfin processor architecture, operation, and development tools are the primary audience for this manual.

Programmers who are unfamiliar with VisualDSP++ or EZ-KIT Lite evaluation software should refer to the *ADSP-BF533*, *ADSP-BF537*, or *ADSP-BF561 Evaluation System Manual*, VisualDSP++ online Help, and user's or getting started guides. For the locations of these documents, refer to "Related Documents".

Manual Contents

The manual consists of:

- Chapter 1, "USB-LAN EZ-Extender Interfaces" on page 1-1
  Provides basic board information.
- Chapter 2, "USB-LAN EZ-Extender Hardware Reference" on page 2-1
  Provides information on the hardware aspects of the board.
- Appendix A, "USB-LAN EZ-Extender Bill Of Materials" on page A-1
  Provides a list of components used to manufacture the EZ-Extender board.
- Appendix B, "USB-LAN EZ-Extender Schematic" on page B-1
  Provides the resources to allow EZ-KIT Lite board-level debugging or to use as a reference design.

Appendix B now is part of the online Help. The PDF version of the *Blackfin USB-LAN EZ-Extender Manual* is located in the `Docs\EZ-KIT Lite Manuals` folder on the installation CD. Alternatively, the book can be found on the Analog Devices Web site, `www.analog.com/processors`.

What's New in This Manual

This edition of the *Blackfin USB-LAN EZ-Extender Manual* has been updated for the latest revision of VisualDSP++.

Technical or Customer Support

You can reach Analog Devices, Inc. Customer Support in the following ways:

- Visit the Embedded Processing and DSP products Web site at
  http://www.analog.com/processors/technicalSupport
- E-mail tools questions to
  processor.tools.support@analog.com
- E-mail processor questions to
  processor.support@analog.com (World wide support)
  processor.europe@analog.com (Europe support)
  processor.china@analog.com (China support)
- Phone questions to **1-800-ANALOGD**
- Contact your Analog Devices, Inc. local sales office or authorized distributor
- Send questions by mail to:
  Analog Devices, Inc.
  One Technology Way
  P.O. Box 9106
  Norwood, MA 02062-9106
  USA

Supported Products

The Blackfin USB-LAN EZ-Extender is designed as an extender board to the ADSP-BF533, ADSP-BF537, and ADSP-BF561 EZ-KIT Lite evaluation systems.

Product Information

You can obtain product information from the Analog Devices Web site, from the product CD-ROM, or from the printed publications (manuals).

Analog Devices is online at www.analog.com. Our Web site provides information about a broad range of products—analog integrated circuits, amplifiers, converters, and digital signal processors.

Related Documents

For information on product related development software, see the following publications.

Table 1. Related Processor Publications

Title	Description
• *ADSP-BF533 Embedded Processor Datasheet* • *ADSP-BF536/ADSP-BF537 Embedded Processor Datasheet* • *ASP-BF561 Blackfin Embedded Symmetric Multi-Processor Datasheet*	General functional description, pinout, and timing
• *ADSP-BF533 Blackfin Processor Hardware Reference* • *ADSP-BF537 Blackfin Processor Hardware Reference* • *ASP-BF561 Blackfin Processor Hardware Reference*	Description of internal processor architecture and all register functions
Blackfin Processor Instruction Set Reference	Description of all allowed processor assembly instructions

All documentation is available online. Most documentation is available in printed form.

Table 2. Related VisualDSP++ Publications

Title	Description
• *ADSP-BF533 EZ-KIT Lite Evaluation System Manual* • *ADSP-BF537 EZ-KIT Lite Evaluation System Manual* • *ADSP-BF561 EZ-KIT Lite Evaluation System Manual*	Description of the EZ-KIT Lite features and usage. Note: For the ADSP-BF537 EZ-KIT Lite, there is additional *Getting Started with ADSP-BF537 EZ-KIT Lite*.
VisualDSP++ User's Guide	Description of VisualDSP++ features and usage
VisualDSP++ Assembler and Preprocessor Manual	Description of the assembler function and commands
VisualDSP++ C/C++ Complier and Library Manual for Blackfin Processors	Description of the complier function and commands for Blackfin processors
VisualDSP++ Linker and Utilities Manual	Description of the linker function and commands
VisualDSP++ Loader and Utilities Manual	Description of the loader function and commands

Visit the Technical Library Web site to access all processor and tools manuals and data sheets:
http://www.analog.com/processors/resources/technicalLibrary.

Notation Conventions

Text conventions used in this manual are identified and described as follows.

Example	Description
Close command (**File** menu)	Titles in reference sections indicate the location of an item within the VisualDSP++ environment's menu system (for example, the **Close** command appears on the **File** menu).
`{this	that}`	Alternative required items in syntax descriptions appear within curly brackets and separated by vertical bars; read the example as `this` or `that`. One or the other is required.
`[this	that]`	Optional items in syntax descriptions appear within brackets and separated by vertical bars; read the example as an optional `this` or `that`.
`[this,…]`	Optional item lists in syntax descriptions appear within brackets delimited by commas and terminated with an ellipse; read the example as an optional comma-separated list of `this`.
`.SECTION`	Commands, directives, keywords, and feature names are in text with `letter gothic` font.
`filename`	Non-keyword placeholders appear in text with italic style format.
ⓘ	**Note:** For correct operation, ... A Note provides supplementary information on a related topic. In the online version of this book, the word **Note** appears instead of this symbol.
⚡	**Caution:** Incorrect device operation may result if ... **Caution:** Device damage may result if ... A Caution identifies conditions or inappropriate usage of the product that could lead to undesirable results or product damage. In the online version of this book, the word **Caution** appears instead of this symbol.
⊘	**Warning:** Injury to device users may result if ... A Warning identifies conditions or inappropriate usage of the product that could lead to conditions that are potentially hazardous for the devices users. In the online version of this book, the word **Warning** appears instead of this symbol.

Additional conventions, which apply only to specific chapters, may appear throughout this document.

1 USB-LAN EZ-EXTENDER INTERFACES

This chapter provides the setup procedures for both the Blackfin USB-LAN EZ-Extender and EZ-KIT Lite (ADSP-BF533, ADSP-BF537 or ADSP-BF561) and describes each of the interfaces the extender supports.

The information is presented in the following order.

USB-LAN EZ-Extender Setup

It is very important to set up all of the components of the system containing the USB-LAN EZ-Extender before applying power to that system. The following procedure is recommended for the correct setup.

Power your system when these steps are completed:

1. Read the applicable design interface section in this chapter—the text provides an overview of the capabilities of the interface.
2. Read "System Architecture" on page 2-2 to understand the physical connections of the extension board. For detailed information, refer to "USB-LAN EZ-Extender Schematic" on page B-1.

3. Remove any rubber feet that may be attached to the EZ-KIT Lite. In place of these rubber feet, install the four nylon feet and screws provided with the USB-LAN EZ-Extender. Install the nylon feet in the mounting holes of the EZ-KIT Lite's printed circuit board (PCB). Flip the EZ-KIT Lite upside down so that the three expansion headers (`J1-3`) are facing up.

4. Set the switches and jumpers on the USB-LAN EZ-Extender board. Use the block diagram in Figure 2-1 on page 2-2 in conjunction with "Jumper Setting" on page 2-3 and "Switch Settings" on page 2-6.

5. Set the switches and jumpers on EZ-KIT Lite board. If not already, familiarize yourself with the documentation and schematics of the EZ-KIT Lite (see "Related Documents"). Compare the expansion interface signals of the USB-LAN EZ-Extender board with the signals of the EZ-KIT Lite board to ensure there is no contention. For example, it may be necessary to disable other devices connected to the expansion interface of the processor and disable the push buttons on the EZ-KIT Lite.

6. Install the USB-LAN EZ-Extender on the EZ-KIT Lite via the three-connector expansion interface.

7. Configure any other interfacing boards, for example, another EZ-Extender board.

USB Software

For information on the USB software (host-side and device-side), refer to the `USB Software Readme.txt` file located in the `...\`*`VisualDSP++ install path`*`\Blackfin\Examples\USB-LAN EZ-EXTENDER\USB` directory.

Ethernet Software

For information on the LAN software, refer to the `LAN Software Readme.txt` file located in the `...\VisualDSP++ install path\Blackfin\EZ-KITs\USB-LAN EZ-EXTENDER\LAN` directory.

USB 2.0 Interface

The USB-LAN EZ-Extender allows you to connect a USB 2.0 chip to a Blackfin processor without any other programmable logic required. PLX's (formerly Netchip) Net2272 device ties directly to the asynchronous memory bank 3 of the Blackfin processor. You can read from and write to the USB 2.0 controller by directly addressing the named memory bank.

You can reset the Net2272 processor by asserting `LOW` these flag pins: `PF11` on the ADSP-BF533 processor, `PF6` on the ADSP-BF537 processor, and `PF11` on the ADSP-BF561 processor.

The flag pins can be used for push buttons or LEDs on the respective EZ-KIT Lite; consequently, the user must make the proper changes to that EZ-KIT Lite. The switch settings required for each of the respective EZ-KIT Lites are described in the `USB Software Readme.txt` file in the `...\Blackfin\Examples\USB-LAN EZ-EXTENDER\USB` subdirectory of the VisualDSP++ installation directory. The readme file describes the USB software, source code, drivers, and explains how to run a USB-based application.

For correct switch settings, refer to the schematics drawing of the respective device.

The USB IRQ line of the extender connects to PF10 on the ADSP-BF533 and ADSP-BF561 processors, PF7 on the ADSP-BF537 processors. These flag pins may be used for push buttons or LEDs on the respective EZ-KIT Lites; consequently, the user must make the proper changes to that EZ-KIT Lite.

When writing to and reading from the USB device using the EZ-KIT Lites, use memory addresses from Table 1-1.

Table 1-1. USB Device Memory

Device Connects to	Starting Address	Ending Address
ADSP-BF533 EZ-KIT Lite	0x2030 0000	0x2030 007F
ADSP-BF537 EZ-KIT Lite	0x2030 0000	0x2030 007F
ADSP-BF561 EZ-KIT Lite	0x2C00 0000	0x2C00 007F

Ethernet Interface

The USB-LAN EZ-Extender allows you to connect a 10/100 Mbps Ethernet chip to a Blackfin processor. SMSC's LAN91C111 device ties directly to the asynchronous memory bank 3 of the Blackfin processor. You can read from and write to the Ethernet controller by directly addressing the named memory bank.

You can reset the Ethernet processor by asserting the board reset on the ADSP-BF533 and ADSP-BF561 EZ-KIT Lites. The reset connects to a supervisory reset circuit managed by the Analog Devices ADM708 IC device. ADM708 also asserts a reset to the Ethernet chip at power-up.

The Ethernet IRQ line connects to the PF9 flag pin of the ADSP-BF533 processor and PF9 of the ADSP-BF561 processor. The flag pins may be used for push buttons or LEDs on the respective EZ-KIT Lite; consequently, the user must remember to make the proper changes to that EZ-KIT Lite. The switch settings required for each of the respective

EZ-KIT Lites are described in the `LAN Software Readme.txt` file in the `...\Blackfin\Examples\USB-LAN EZ-EXTENDER\LAN` subdirectory of the VisualDSP++ installation directory. The readme file describes the LAN software, source code, drivers, and explains how to run an Ethernet application.

For correct switch settings, refer to the schematics drawing of the respective device.

When writing to and reading from the Ethernet device using the EZ-KIT Lites, use memory ranges from Table 1-2.

Table 1-2. LAN Device Memory

Device Connects to	Starting Address	Ending Address
ADSP-BF533 EZ-KIT Lite	`0x2031 0000`	`0x2031 FFFF`
ADSP-BF561 EZ-KIT Lite	`0x2C01 0000`	`0x2C01 FFFF`

Optional ADSP-BF537 EZ-KIT Lite Interfaces

Optional ADSP-BF537 EZ-KIT Lite interfaces are:

- "Power-Over-Ethernet"
- "MII Interface"

Power-Over-Ethernet

The Blackfin USB-LAN EZ-Extender, when used in conjunction with the ADSP-BF537 EZ-KIT Lite, allows a user to power both the EZ-KIT Lite and the extender via a 10/100 Mbps switch or a Midspan device that supports IEEE802.3.AF.

The EZ-KIT Lite and extender must not be powered via the 7.5V supply when in Power-over-Ethernet (PoE) mode. A user can make the appropriate jumper changes to the EZ-KIT Lite and extender and then connect the kit to the extender to power both boards via the switch or Midspan device. The user must use a switch or Midspan device that supports power via the data pairs. If a user uses a Midspan device that powers only over the spare pins, then the PoE circuitry will not work.

Table 1-3 shows a recommended Midspan device that supports both power over the spare pins and power over the data pairs.

Table 1-3. Midspan Device

Power Sourcing Equipment	Manufacturer	Part Number
Midspan device	PowerDsine 6	PD-8006/AC

Use the Ethernet connector on the EZ-KIT Lite for the PoE application. Power-over-Ethernet does not work properly if the Ethernet connector is used on the extender board. When in PoE mode, the blinking LEDs (`LED1-6`) confirm successful power-up. Since PoE is intended as a simple demonstration of the power circuitry, you are not able to bring up a VisualDSP ++ session while in the PoE mode.

Refer to "Power Select Jumper (JP1)" on page 2-3 for the extender's PoE settings. Refer to the *ADSP-BF537 EZ-KIT Lite Evaluation System Manual* for the EZ-KIT Lite's PoE settings.

MII Interface

The Media Independent Interface (MII) allows you to evaluate different PHY devices with the ADSP-BF537 EZ-KIT Lite. A separately purchased PHY evaluation board connects directly to the USB-LAN EZ-Extender. You also need to purchase the `J2` connector and solder it to be able to connect the two boards together. The part numbers of the SMSC's evaluation boards and `J2` connector are shown in Table 1-4.

Table 1-4. PHY Devices

Part Description	Manufacturer	Manufacturer Part #
J2 20 x 2 connector	AMP/TYCO ELECTRONICS	787170-4
MII evaluation board	SMSC	EVB185
MII evaluation board	SMSC	EVB183

2 USB-LAN EZ-EXTENDER HARDWARE REFERENCE

This chapter describes the hardware design of the USB-LAN EZ-Extender.

The following topics are covered.

System Architecture

A block diagram of the Blackfin USB-LAN EZ-Extender is shown in Figure 2-1.

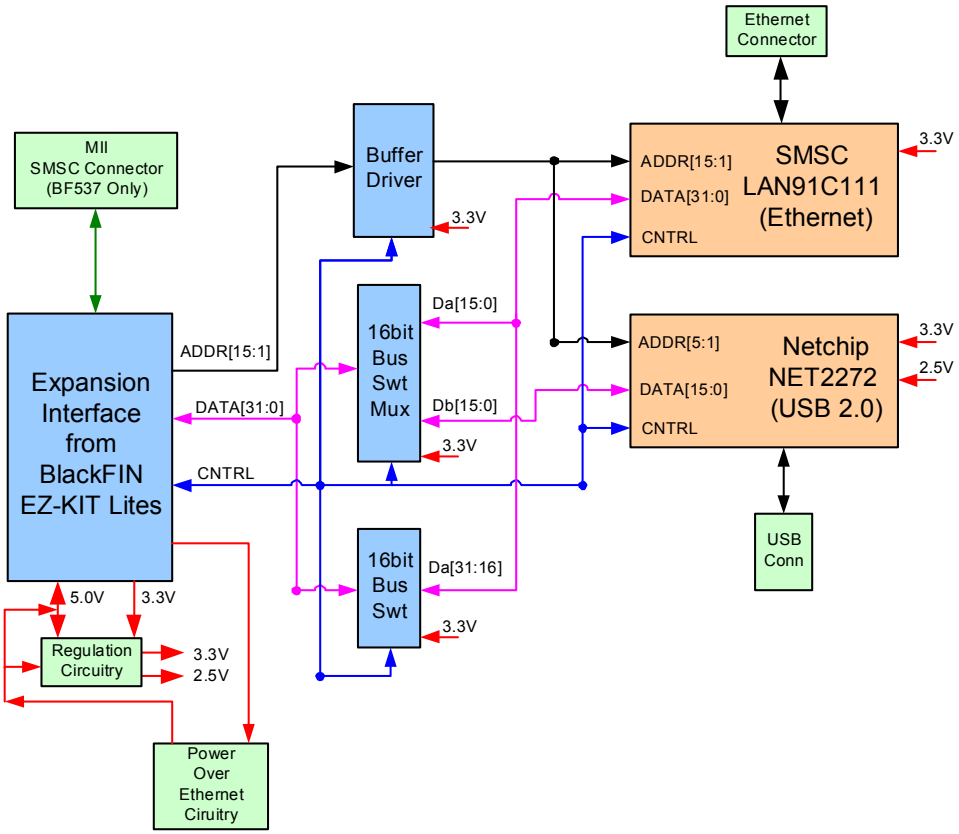

Figure 2-1. Block Diagram

Jumper Setting

Before using the Blackfin USB-LAN EZ-Extender, follow the steps in "USB-LAN EZ-Extender Setup" on page 1-1.

Figure 2-2 shows the locations of all jumper headers. A two-pin jumper can be placed on the respective jumper header for different functionality. The following sections describe all possible jumper settings and associated functionality.

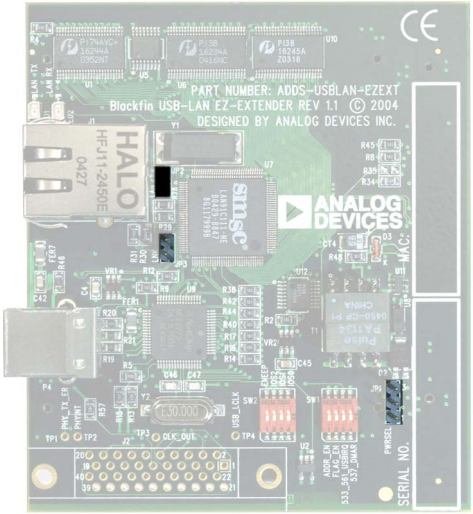

Figure 2-2. Jumper Locations

Power Select Jumper (JP1)

The power select jumper, `JP1`, by default, must have no jumpers on any of its pins. Jumpers can be used only when the extender is plugged into an ADSP-BF537 EZ-KIT Lite.

Table 2-1. JP1 Settings

Source of 5V Power	JP1 Setting
EZ-KIT Lite power	**No jumpers (default)**
USB test mode (do not use)	`JP1.1` and `JP1.2`
Power-over-Ethernet	`JP1.2` and `JP1.3`

When using an ADSP-BF533 or ADSP-BF561 EZ-KIT Lite, the user must not place any jumpers on `JP1`. Placing a jumper on `JP1` can damage the extender card and/or the EZ-KIT Lite. The user must power the ADSP-BF533/ADSP-BF561 EZ-KIT Lite and USB-LAN EZ-Extender with the 7.5V power supply provided with the EZ-KIT Lite.

When using an ADSP-BF537 EZ-KIT Lite without the Power-over-Ethernet feature, the user must not place any jumpers on `JP1`. The user must power both the EZ-KIT Lite and extender with the 7.5V power supply provided with the EZ-KIT Lite.

When using an ADSP-BF537 EZ-KIT Lite with the Power-over-Ethernet, the user must place a jumper between `JP1` pin 2 and `JP1` pin 3. The user must power both the EZ-KIT Lite and USB-LAN EZ-Extender with the CAT5E Ethernet cable, which provides power over the signal pairs. The Ethernet cable must be plugged into the Ethernet connector of the ADSP-BF537 EZ-KIT Lite, but not the USB-LAN EZ-Extender. The 7.5V power supply provided with the EZ-KIT Lite should not be used.

For an overview of the Power-over-Ethernet interface, refer to "Power-Over-Ethernet" on page 1-5.

LAN Power Jumper (JP2)

The LAN power jumper, JP2, is used to power the SMSC's 91C111 device with 3.3V. By default, and, in general, the jumper is plugged in. This jumper is provided for user flexibility. The user must make changes to the JP2 jumper only when no power is applied to the USB-LAN EZ-Extender and/or the EZ-KIT Lite.

Table 2-2. JP2 Settings

Functionality	JP2 Setting
No power to the LAN91C111	No jumper
All other cases	**JP2.1 and JP2.2 (default)**

Link Jumper (JP3)

The link jumper, JP3, of the USB-LAN EZ-Extender directly connects to the link status pin of the SMSC's 91C111 device. The default setting is to keep the link jumper unpopulated. When the jumper is populated, it sends a logic 0 or LOW to the input port used to convey the LINK status (EPHSR bit14). For more information about populating the jumper, refer to the SMSC LAN91C111 data sheet.

Table 2-3. JP3 Settings

Functionality	JP3 Setting
Logic low on 91C111 link status pin	JP3.1 and JP3.2
All other cases	**No jumper (default)**

Switch Settings

Before using the Blackfin USB-LAN EZ-Extender follow the steps in "USB-LAN EZ-Extender Setup" on page 1-1.

Figure 2-3 shows the locations of all switches. The following sections describe all possible switch settings and associated functionality.

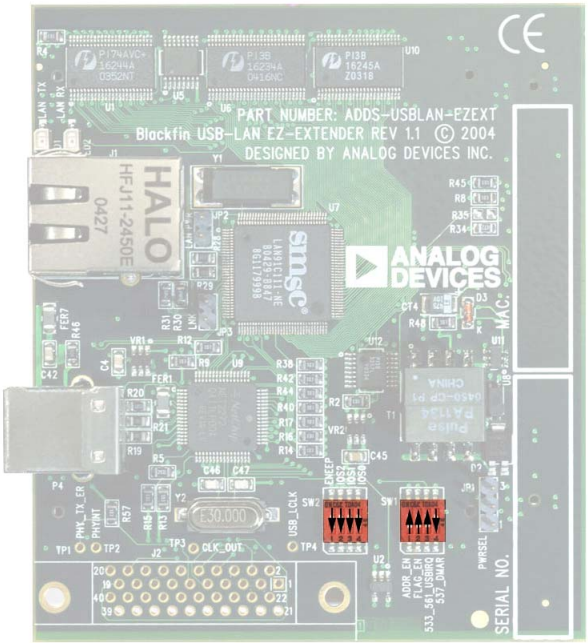

Figure 2-3. Switch Locations

ADDR Enable Switch (SW1.1)

The address enable switch, `SW1.1`, is used to control the output of the Blackfin address bus buffer. By default, the switch is set to the `ON` position. If in the `OFF` position, the user cannot communicate to the USB or the

Ethernet processor. The address enable switch adds flexibility to the processors because you can turn the switch OFF when capacitive loading is an issue present with other peripherals on the EZ-KIT Lite.

Table 2-4. SW1.1 Settings

Functionality	SW1.1 Setting
Blackfin address buffer (U1) enabled	**ON (default)**
Blackfin address buffer (U1) disabled	OFF

FLAGS Enable Switch (SW1.2)

The flags enable switch, SW1.2, is used to control the output of the Blackfin Flags multiplexer. By default, the SW1.2 switch is set to the ON position. If is in the OFF position, the user cannot communicate to the USB or Ethernet processor. The flags enable switch adds flexibility to the extender—when the switch is OFF, the flags can be used for other peripherals of the EZ-KIT Lite.

Table 2-5. SW1.2 Settings

Functionality	SW1.2 Setting
FLAGS (U12) enabled	**ON (default)**
Blackfin FLAGS (U12) disabled	OFF

USB IRQ Enable Switch (SW1.3)

The USB IRQ enable switch, SW1.3, is used to control the connection between the Netchip 2272 IRQ line with the respective flag pin on the Blackfin processor. The switch connects the USB_IRQ line with PF10 on the ADSP-BF533 and ADSP-BF561 processors, and PF7 on the ADSP-BF537 processor. By default, the USB IRQ enable switch is in the ON position. When in the OFF position, communication with the USB

processor cannot be established. The SW1.3 adds flexibility to the extender—when the switch is OFF, the Flag can be used for other peripherals of the EZ-KIT Lite.

Table 2-6. SW1.3 Settings

Functionality	SW1.3 Setting
USB IRQ enabled	**ON (default)**
USB IRQ disabled	OFF

Test Mode Enable Switch (SW1.4)

The test mode enable switch, SW1.4, is an internal test pin and should not be used. This switch, by default, is set to the OFF position.

Table 2-7. SW1.4 Settings

Functionality	SW1.4 Setting
Test mode enabled	ON
Test mode disabled	**OFF (default)**

Serial ROM Enable Switch (SW2.1)

The serial ROM enable switch, SW2.1, is used to control the connection between the LAN91C111 Ethernet processor with its serial ROM (U3). When the switch is disabled, the Ethernet processor loads its Media Access Control (MAC) address from the serial ROM. The SW2.1 switch, by default, is set to the OFF position. If the switch is in the ON position, you are not able to communicate with the Ethernet application code provided. The switch adds flexibility to the extender—you can modify the application code and generate another MAC address when the switch is ON.

Table 2-8. SW2.1 Settings

Functionality	SW2.1 Setting
Serial ROM disabled	ON
Serial ROM enabled	**OFF (default)**

IOS[2:0] Switch (SW2.2, SW2.3, SW2.4)

The `IOS[2:0]` bits on the USB-LAN EZ-Extender are directly connected to the `IOS[2:0]` pins of the LAN91C111 Ethernet processor. These switches, by default, are set to the `OFF` positions. The pins are used in conjunction with the "Serial ROM Enable Switch (SW2.1)" to select between predefined EEPROM configurations. For more information about the switches, refer to the SMSC LAN91C111 data sheet.

A USB-LAN EZ-EXTENDER BILL OF MATERIALS

The bill of materials corresponds to "USB-LAN EZ-Extender Schematic" on page B-1. Please check the latest schematic on the Analog Devices Web site:
http://www.analog.com/Processors/Processors/DevelopmentTools/technicalLibrary/manuals/DevToolsIndex.html#Evaluation%20Kit%20Manuals.

Ref.	Qty.	Description	Reference Designator	Manufacturer	Part Number
1	1	25MHZOSC005	Y1	EPSON	MA-505 25.0000M-C0:ROHS
2	1	SN74AHC1G00 SOT23-5	U2	TI	SN74AHC1G00DBVR
3	1	PI74AVC+16244 TSSOP48	U1	PERICOM SEMI	PI74AVC+16244AE
4	1	93LC46BSOIC8	U3	MICROCHIP	93LC46B/SNG
5	1	LAN91C111 TQFP128	U7	SMSC	LAN91C111-NU
6	1	NET2272TQFP64	U9	NET CHIP	NET2272REV1A-LF
7	1	PI3B16234 TSSOP56	U6	PERICOM SEMI	PI3B16234AE
8	1	PI3B16245 TSSOP48	U10	PERICOM SEMI	PI3B16245AE
9	1	PI3B3257 TSSOP16	U12	PERICOM SEMI	PI3B3257LE

Ref.	Qty.	Description	Reference Designator	Manufacturer	Part Number
10	1	74LVC139 TSSOP16	U5	PHILIPS	74LVC139PW
11	1	30MHZOSC010	Y2	ECLIPTEK	E2SAA10-30.000M
12	1	PA1134ICS005	T1	PULSE	PA1134NL
13	1	PS2911-1ICS006	U8	NEC	PS2911-1-F3-A
14	1	SI3440DVTSOP6	U11	VISHAY	Si3440DV-T1-E3
15	1	TLV431A SOT23-3	U13	ON-SEMI	TLV431ASN1T1G
16	1	LTC4267SSOP16	U4	LINEAR TECH	LTC4267CGN#PBF
17	1	ADP3330ARTZ-33 SOT23-6	VR2	ANALOG DEVICES	ADP3330ARTZ3.3-RL7
18	1	ADP3330ARTZ-25 SOT23-6	VR1	ANALOG DEVICES	ADP3330ARTZ-2.5-R7
19	1	USB 4PIN CON009	J3	MILL MAX	897-43-004-90-000000
20	3	0.05 45x2 CON018	P1-3	SAMTEC	TFC-145-32-F-D
21	2	DIP4SWT018	SW1-2	ITT	TDA04HOSB1
22	1	RJ45 8PIN CON_RJ45B	J1	HALO ELECTRONIC	HFJ11-2450E-RL
23	2	IDC2X1IDC2X1	JP2-3	FCI	90726-402HLF
24	1	IDC3X1IDC3X1	JP1	FCI	90726-403HLF
25	1	01/4W5%1206	R56	KOA	0.0ECTRk7372BTTED
26	2	YELLOWLED001	LED1-2	PANASONIC	LN1461C
27	7	0.01UF 100V 10% 0805	C1,C3,C6,C8,C11, C13,C16	AVX	08051C103KAT2A
28	30	0.1UF 50V 10% 0805	C2,C7,C9-10,C12, C19-41,C43,C48	AVX	08055C104KAT

Ref.	Qty.	Description	Reference Designator	Manufacturer	Part Number
29	27	10K 1/10W 5% 0805	R1-4,R8-18, R36-45,R48,R57	VISHAY	CRCW080510K0JNEA
30	1	331/10W5%0805	R55	VISHAY	CRCW080533R0JNEA
31	1	4.7K 1/10W 5% 0805	R34	VISHAY	CRCW08054K70JNEA
32	1	1M 1/10W 5% 0805	R6	VISHAY	CRCW08051M00JNEA
33	1	1.5K 1/10W 5% 0805	R20	VISHAY	CRCW08051K50FKEA
34	3	10UF 16V 10% B	CT1-3	AVX	TAJB106K016R
35	1	300MA LL4148 DL35	D3	DIODES INC	LL4148-13
36	5	600 100MHZ 500MA 1206	FER1-4,FER7	STEWARD	HZ1206B601R-10
37	1	11.0K 1/8W 1% 1206	R25	VISHAY	CRCW120611K0FKEA
38	2	30PF 100V 5% 1206	C14-15	AVX	12061A300JAT2A
39	1	47.0K 1/10W 1% 0805	R7	VISHAY	CRCW080547K0FKEA
40	4	01/10W5%0805	R28-29,R46,R54	VISHAY	CRCW08050000ZSEA
41	1	3.32K 1/10W 1% 0805	R53	PANASONIC	ERJ-6ENF3321V
42	2	42 100MHZ 4A 0805	FER5-6	TAIYO YUDEN	FBMJ2125HS420-T
43	2	39.0 1/10W 1% 0805	R19,R21	DIGI-KEY	311-39.0CRTR-ND
44	4	0.47UF 16V 10% 0805	C4-5,C44-45	AVX	0805YC474KAT2A

Ref.	Qty.	Description	Reference Designator	Manufacturer	Part Number
45	3	1UF 10V 10% 0805	C17-18,C42	AVX	0805ZC105KAT2A
46	1	680UF 6.3V 10% E	CT6	AVX	TPSE687K006R0045
47	1	100.0 1/10W 1% 0805	R51	DIGI-KEY	311-100CRCT-ND
48	2	10PF50V5%0805	C46-47	AVX	08055A100JAT2A
49	4	24.9 1/10W 1% 0805	R26-27,R30-31	DIGI-KEY	311-24.9CRTR-ND
50	2	49.9 1/10W 1% 0805	R32-33	DIGI-KEY	311-49.9CRCT-ND
51	1	2.43K 1/10W 1% 0805	R5	DIGI-KEY	311-2.43KCRTR-ND
52	1	40A SMAJ58A DIO003	D1	DIODES INC	SMAJ58A-13-F
53	1	10A SBM1040 DIO004	D2	DIODES INC	SBM1040-13-F
54	1	0.8A HD01 MDIP4	D4	DIODES INC	HD01-T
55	1	68.1 1/10W 1% 0805	R47	VISHAY	CRCW080568R1FNEA
56	1	6.81K 1/10W 1% 0805	R49	VISHAY	CRCW08056K81FNEA
57	1	0.12 1/10W 1% 0603	R50	PANASONIC	ERJ-3RSFR12V
58	2	3301/8W5%1206	R22-23	DALE	CRCW1206330RJNEA
59	1	10.0K 1/8W 1% 1206	R52	DALE	CRCW120610K0FKEA
60	1	4.7UF10V20%B	CT4	PANASONIC	EEE1HA4R7SR

BLACKFIN USB-LAN EZ-EXTENDER

SCHEMATIC

ANALOG DEVICES
20 Cotton Road
Nashua, NH 03063
PH: 1-800-ANALOGD

Title	BLACKFIN USB-LAN EZ-EXTENDER TITLE		
Size C	Board No. A0187-2003		Rev 2.0
Date 4-24-2006_9:43		Sheet 1 of 6	

EXPANSION INTERFACE (TYPE B)

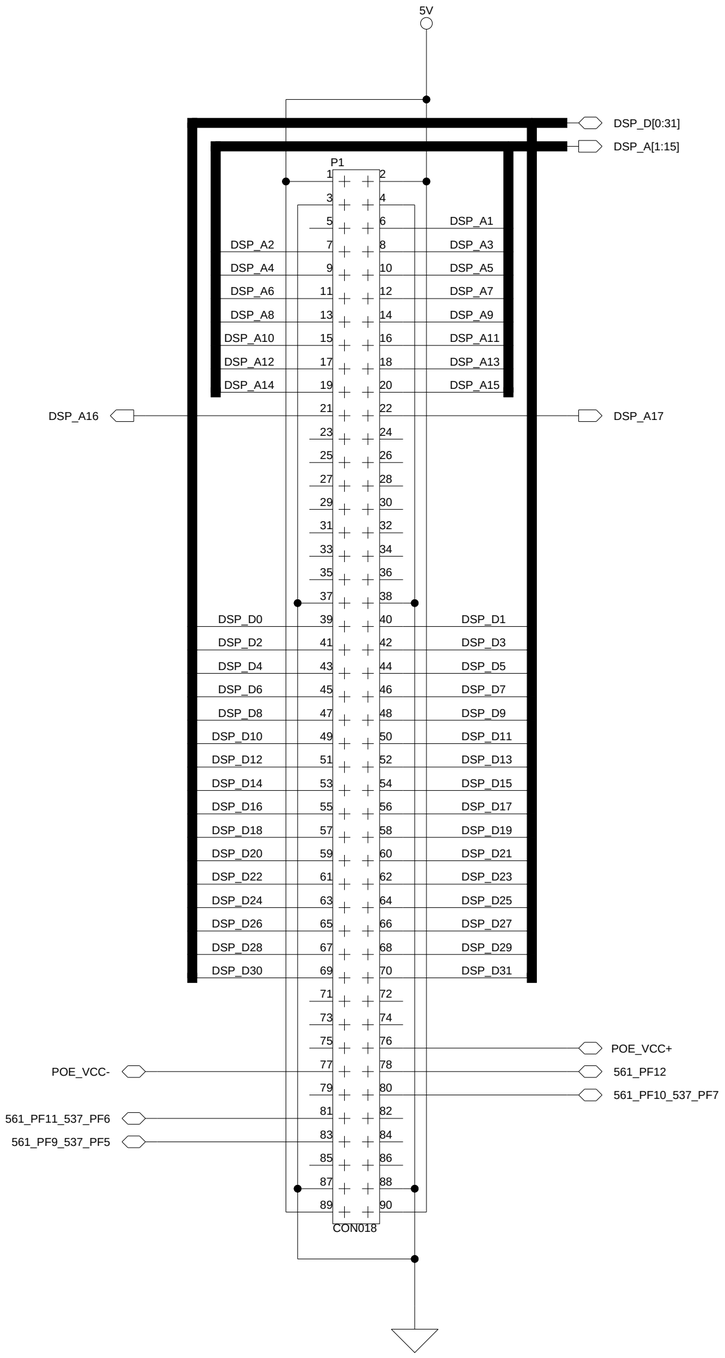

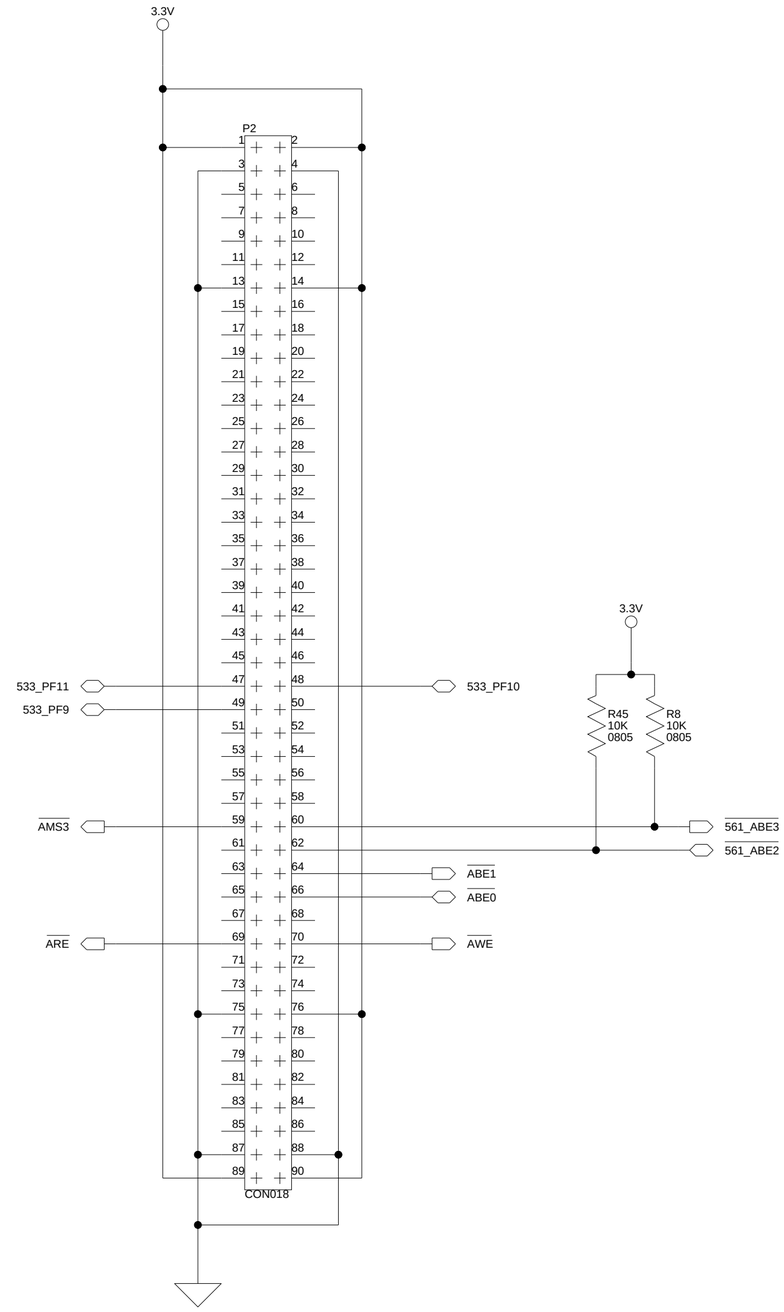

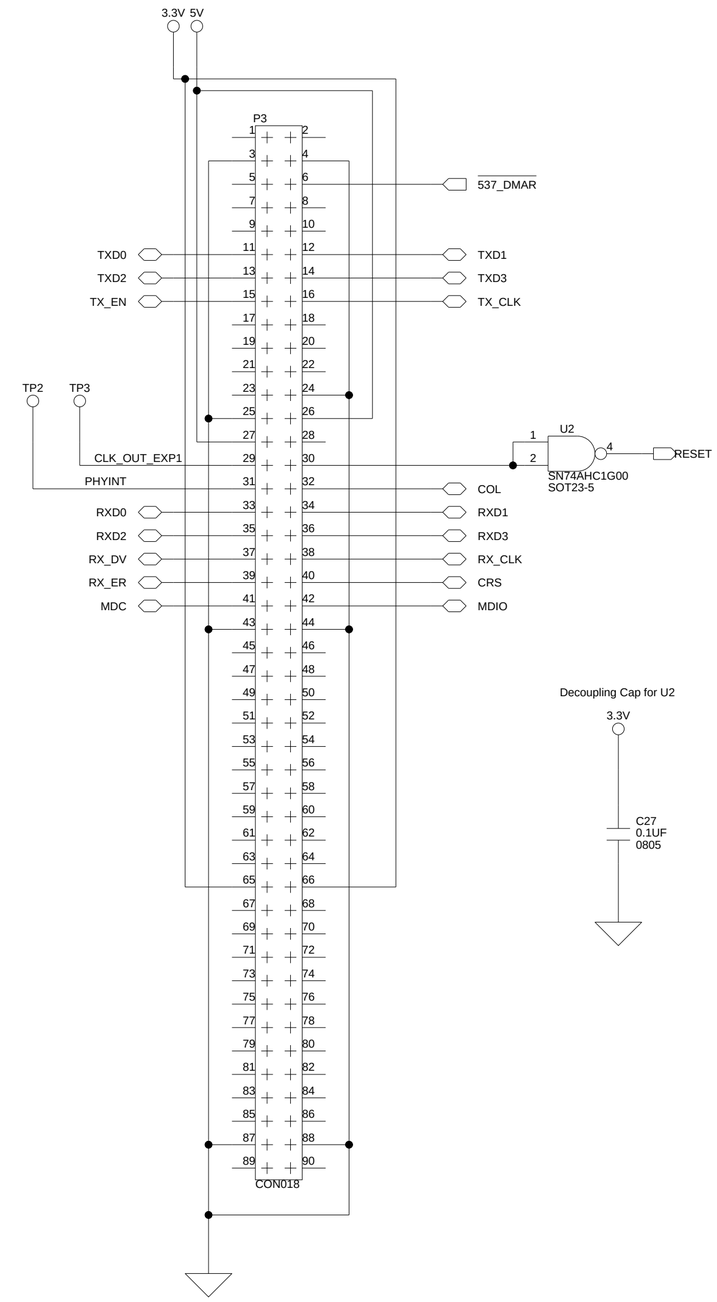

ANALOG DEVICES
20 Cotton Road
Nashua, NH 03063
PH: 1-800-ANALOGD

Title	BLACKFIN USB-LAN EZ-EXTENDER EXPANSION INTERFACE		
Size C	Board No. A0187-2003		Rev 2.0
Date 4-24-2006_9:43		Sheet 2 of 6	

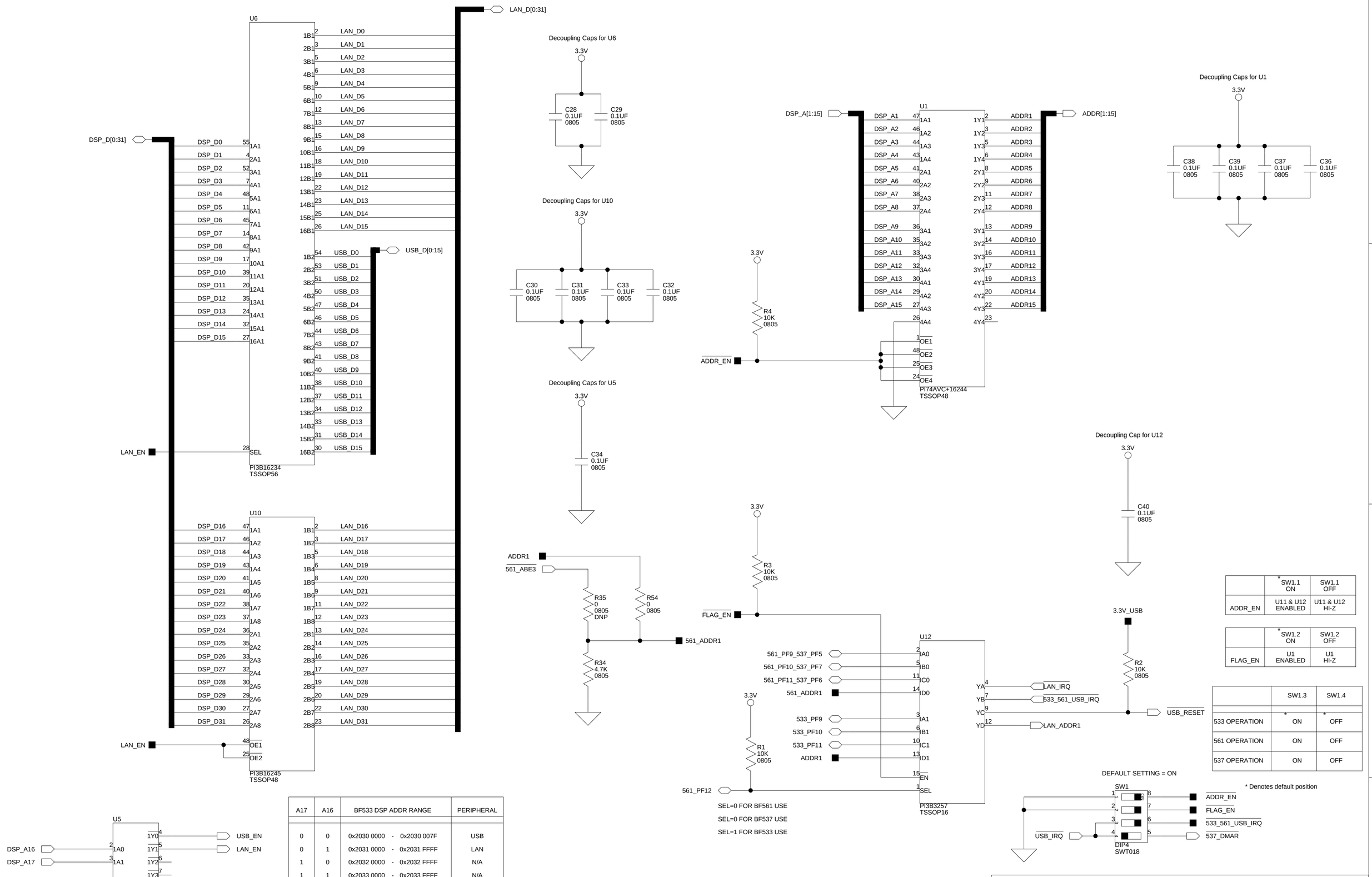

	* SW1.1 ON	SW1.1 OFF
ADDR_EN	U11 & U12 ENABLED	U11 & U12 HI-Z

	* SW1.2 ON	SW1.2 OFF
FLAG_EN	U1 ENABLED	U1 HI-Z

	SW1.3	SW1.4
533 OPERATION	* ON	* OFF
561 OPERATION	ON	OFF
537 OPERATION	ON	OFF

* Denotes default position

A17	A16	BF533 DSP ADDR RANGE	PERIPHERAL
0	0	0x2030 0000 - 0x2030 007F	USB
0	1	0x2031 0000 - 0x2031 FFFF	LAN
1	0	0x2032 0000 - 0x2032 FFFF	N/A
1	1	0x2033 0000 - 0x2033 FFFF	N/A

A17	A16	BF561 DSP ADDR RANGE	PERIPHERAL
0	0	0x2C00 0000 - 0x2C00 007F	USB
0	1	0x2C01 0000 - 0x2C01 FFFF	LAN
1	0	0x2C02 0000 - 0x2C02 FFFF	N/A
1	1	0x2C03 0000 - 0x2C03 FFFF	N/A

A17	A16	BF537 DSP ADDR RANGE	PERIPHERAL
0	0	0x2030 0000 - 0x2030 007F	USB
0	1	0x2031 0000 - 0x2031 FFFF	LAN
1	0	0x2032 0000 - 0x2032 FFFF	N/A
1	1	0x2033 0000 - 0x2033 FFFF	N/A

ANALOG DEVICES
20 Cotton Road
Nashua, NH 03063
PH: 1-800-ANALOGD

Title BLACKFIN USB-LAN EZ-EXTENDER BUS SWITCHES

Size	Board No.	Rev
C	A0187-2003	2.0

Date 4-24-2006_9:43 **Sheet** 3 **of** 6

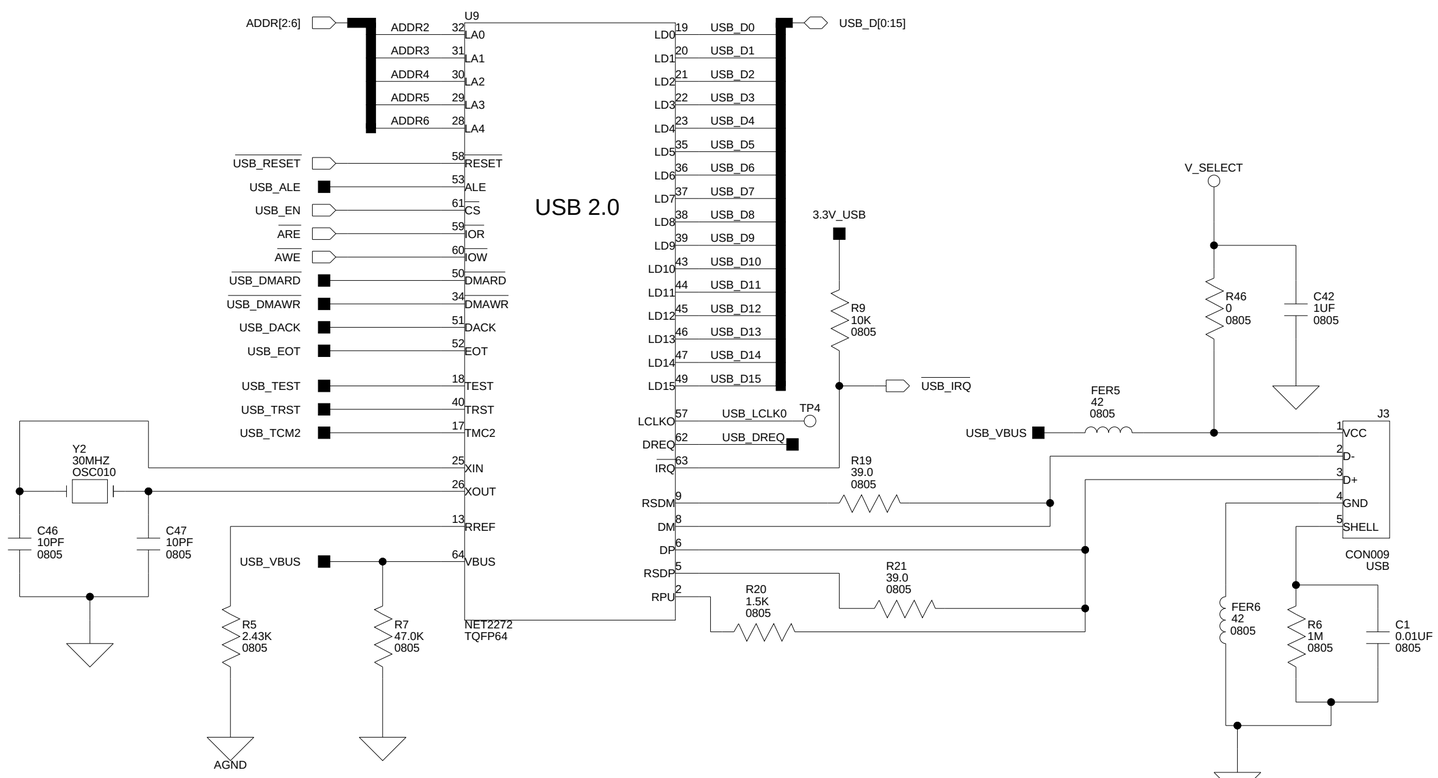

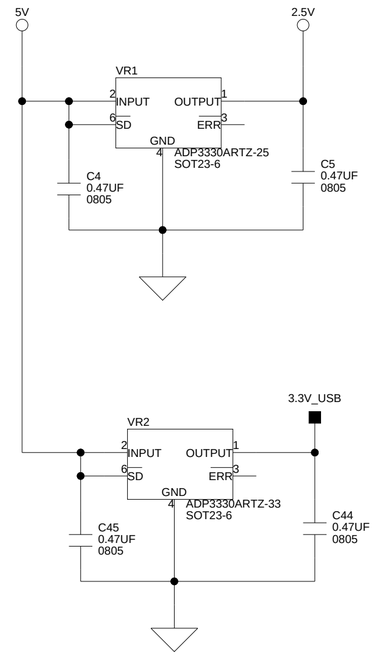

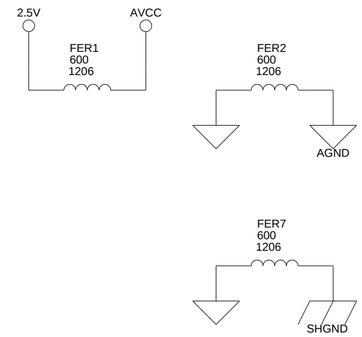

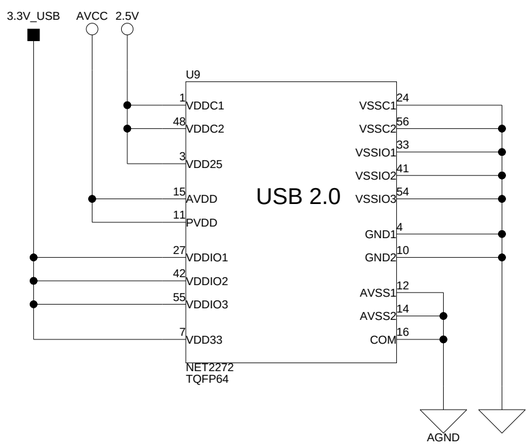

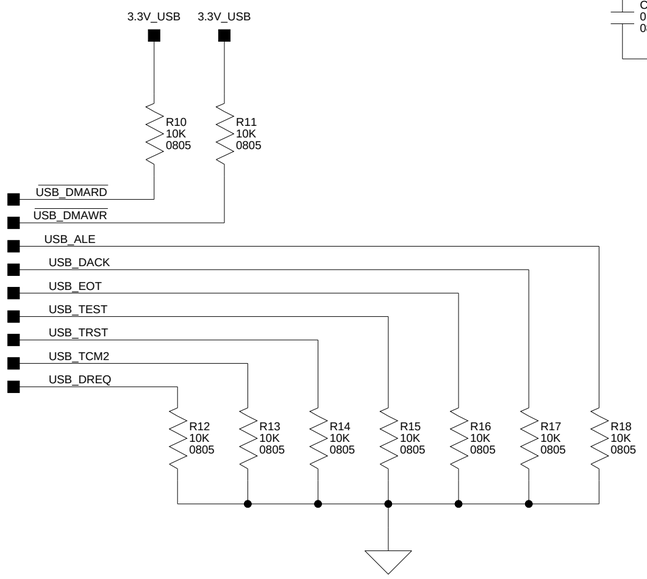

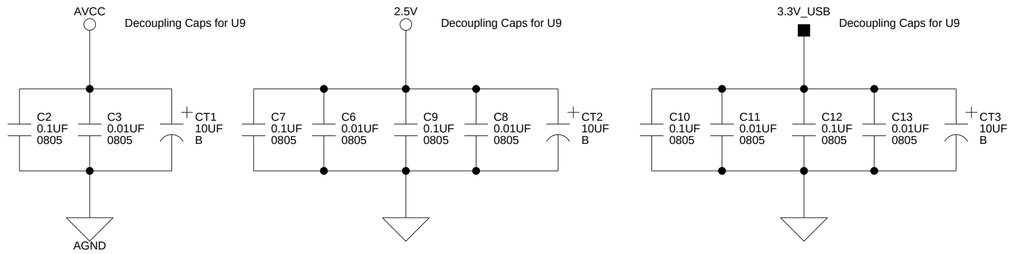

ANALOG DEVICES
20 Cotton Road
Nashua, NH 03063
PH: 1-800-ANALOGD

Title	BLACKFIN USB-LAN EZ-EXTENDER USB		
Size C	Board No. A0187-2003		Rev 2.0
Date 4-24-2006_9:43		Sheet 4 of 6	

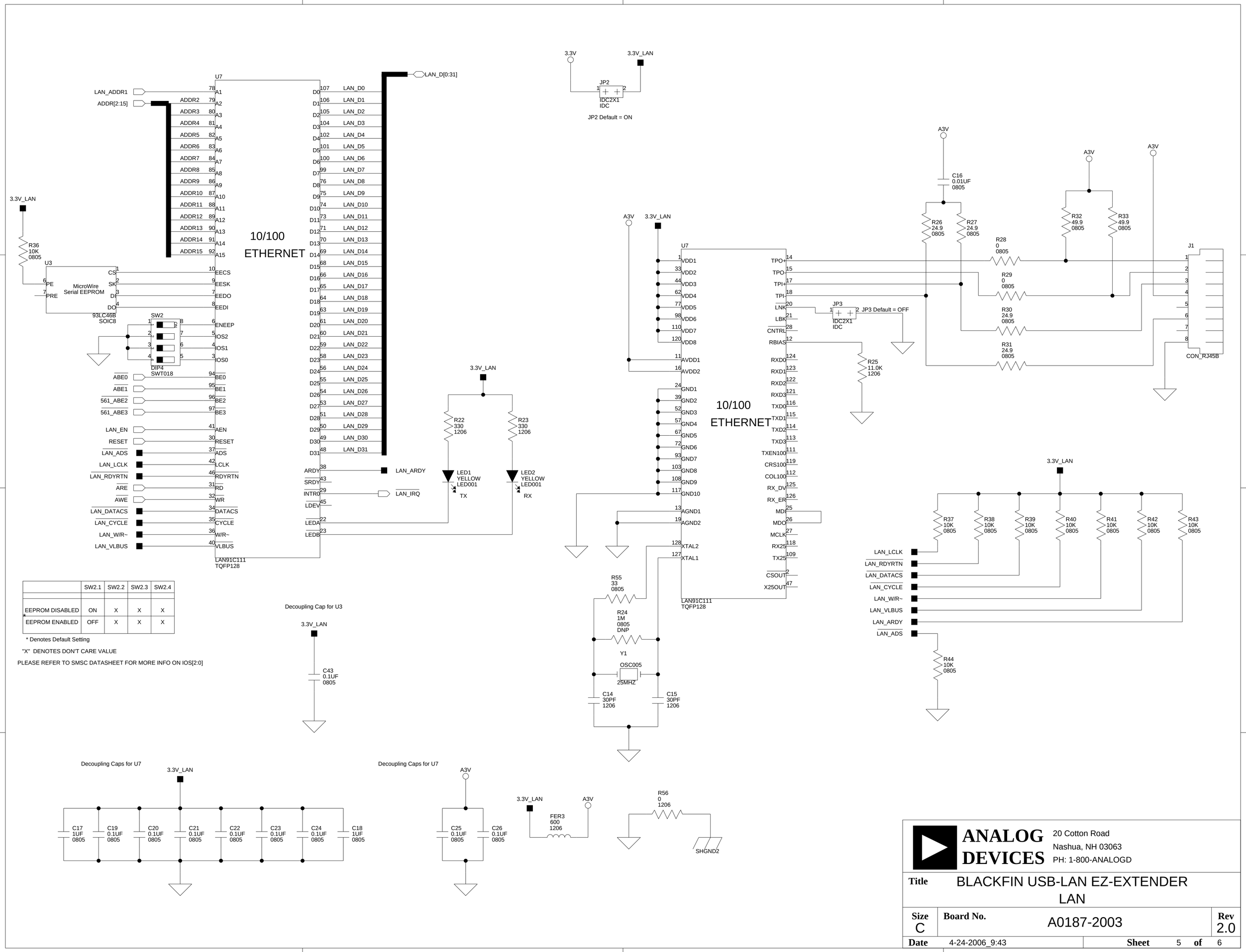

	SW2.1	SW2.2	SW2.3	SW2.4
EEPROM DISABLED	ON	X	X	X
* EEPROM ENABLED	OFF	X	X	X

* Denotes Default Setting

"X" DENOTES DON'T CARE VALUE

PLEASE REFER TO SMSC DATASHEET FOR MORE INFO ON IOS[2:0]

ANALOG DEVICES
20 Cotton Road
Nashua, NH 03063
PH: 1-800-ANALOGD

Title	BLACKFIN USB-LAN EZ-EXTENDER LAN	
Size C	Board No. A0187-2003	Rev 2.0
Date 4-24-2006_9:43	Sheet 5 of 6	

POWER OVER ETHERNET CIRCUITRY

FOR USE WITH ADSP-BF537 EZ-KIT LITE ONLY

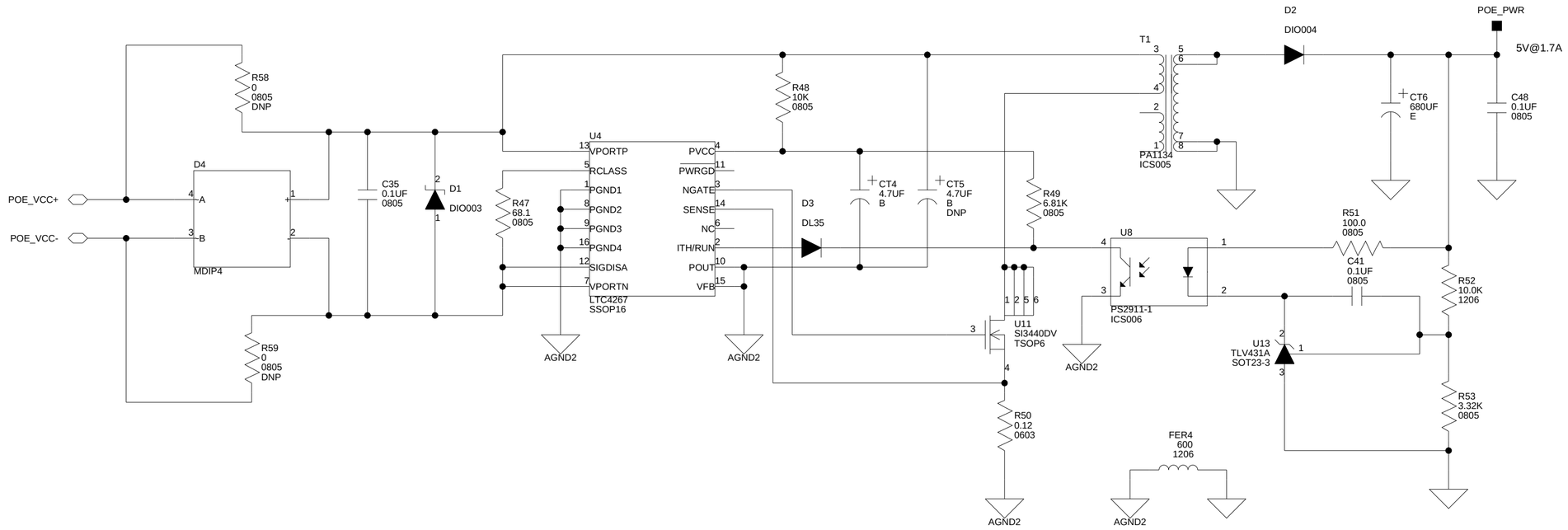

WARNING: THE EZ-KIT LITE MUST NOT BE POWERED WHEN THESE JUMPERS ARE POPULATED.

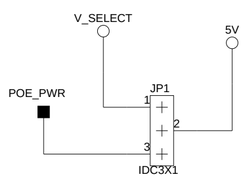

SOURCE OF 5V PWR	JP1 SETTING
EZ-KIT POWER	*NO JUMPER
USB TEST MODE	JP1 and JP2
POE POWER ADSP-BF537 EZ-KIT LITE ONLY	JP2 and JP3

*DENOTES DEFAULT SETTING

MII INTERFACE

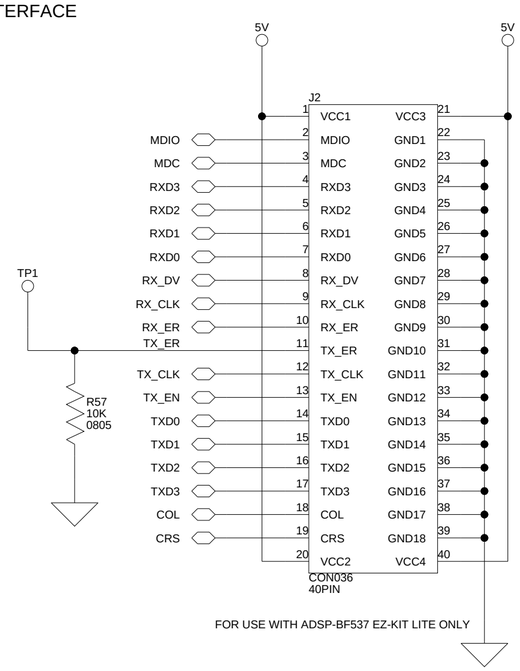

FOR USE WITH ADSP-BF537 EZ-KIT LITE ONLY

ANALOG DEVICES

20 Cotton Road
Nashua, NH 03063
PH: 1-800-ANALOGD

Title	BLACKFIN USB-LAN EZ-EXTENDER POE, MII, PWR SELECTION		
Size C	Board No. A0187-2003		Rev 2.0
Date 4-24-2006_9:43		Sheet 6 of 6	

I INDEX